BRTN801FNM874

BK119-500F-7,5

Validity date 07/07/2025

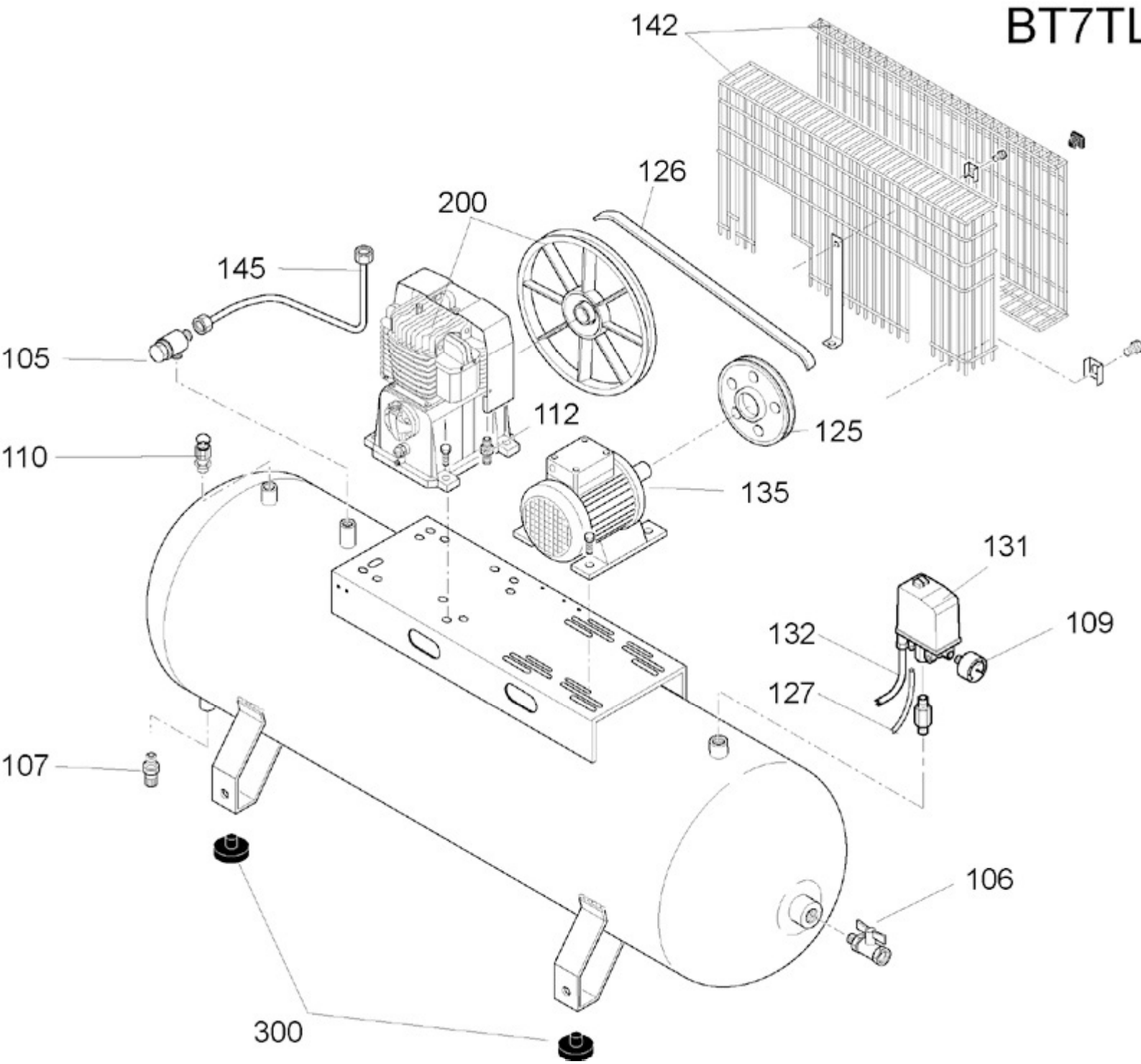

BRTN801FNM874

BK119-500F-7,5

Pos	Component		MU	Multiplier
105	4101335	CHECK VALVE	PZ	1,0
106	9047089	LINE COCK	PZ	1,0
107	9047097	CONDENSATE DRAIN COCK	PZ	1,0
109	9052805	PRESSURE GAUGE	PZ	1,0
110	9049304	RELIEF VALVE	PZ	1,0
112	9053008	NIPPLE/ELBOW	PZ	1,0
125	9076910	PULLEY	PZ	1,0
126	9075881	POLY V BELT	PZ	1,0
127	9270019	RILSAN PIPE 4/6 WHITE "PTFE"	MT	1,5
131	9063228	PRESSURE SWITCH	PZ	1,0
132	9065411	POWER CABLE	PZ	1,0
134	9065413	COVER SEAL	PZ	1,0
135	848T00A	MOTOR	PZ	1,0
142	834302A	BELT GUARD	PZ	1,0
145	4105966	DELIVERY PIPE	PZ	1,0
200	BR0001R	BARE PUMP	PZ	1,0
300	41K0174	WHEELS/FEET MOUNTING KIT	PZ	1,0
4039	9053913	RIDUZ.1"M 1/2"F OT.NICHEL.CEOK	PZ	1,0

BK119 SPB

BARE PUMP

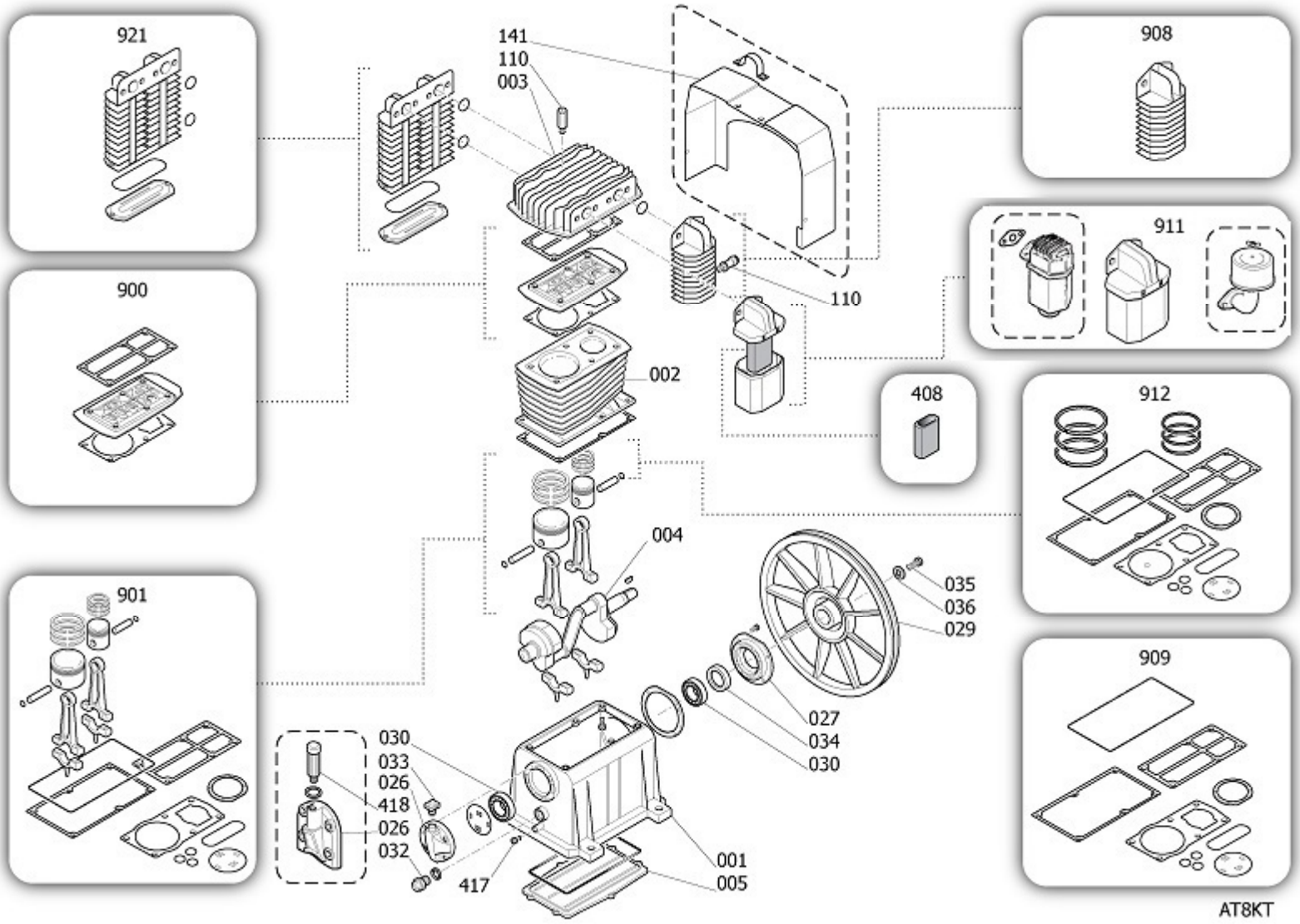

BK119 SPB

BARE PUMP

Pos	Component		MU	Multiplier
1	#113153301	CASING	PZ	1,0
2	BR30000SGL	CYLINDER	PZ	1,0
3	#113178002	HEAD	PZ	1,0
4	#113178006	SHAFT	PZ	1,0
5	#113153007	CASING COVER	PZ	1,0
26	#113141006	FRONT COVER	PZ	1,0
27	#113141007	CASING REAR SUPPORT	PZ	1,0
29	#113178007	FLYWHEEL	PZ	1,0
30	$30300030	BALL BEARING 6205 K8-K28	PZ	1,0
30	$30302140	BALL BEARING 6206 C3	PZ	1,0
32	#012031000	OIL LIGHT	PZ	1,0
33	4105680	OIL PLUG	PZ	1,0
34	#010008000	SEAL	PZ	1,0
35	#114001043	SCREW FLYWHEEL	PZ	5,0
36	4105234	WASHER FLYWHEEL	PZ	1,0
110	#047086000	RELIEF VALVE	PZ	1,0
110	9049184	RELIEF VALVE	PZ	1,0
141	#113178004	CANALISATION	PZ	1,0
408	9434N05	MPK FLT.CARTRIDGE TS 5-7HP	PZ	1,0
417	$36531140	OIL PLUG	PZ	1,0
900	9434A73	MPK PIASTRA VALV.BK114-19 SIL	PZ	1,0
901	9434B30	MPK PISTON-CONROD TS 7HP NW	PZ	1,0
908	9434E04	MPK AFTERCOOLER TS 4-7HP	PZ	1,0
909	9434F27	MPK GASKET TS 7HP NW	PZ	1,0
911	9421662	AIR FILTER KIT	PZ	1,0
912	9434C28	MPK PISTON RINGS TS 7HP NW	PZ	1,0
921	9434D00	MPK INTERCOOLER TS4-7HP	PZ	1,0