BPNC701FNM880

MK113-270-5,5

Validity date 07/07/2025

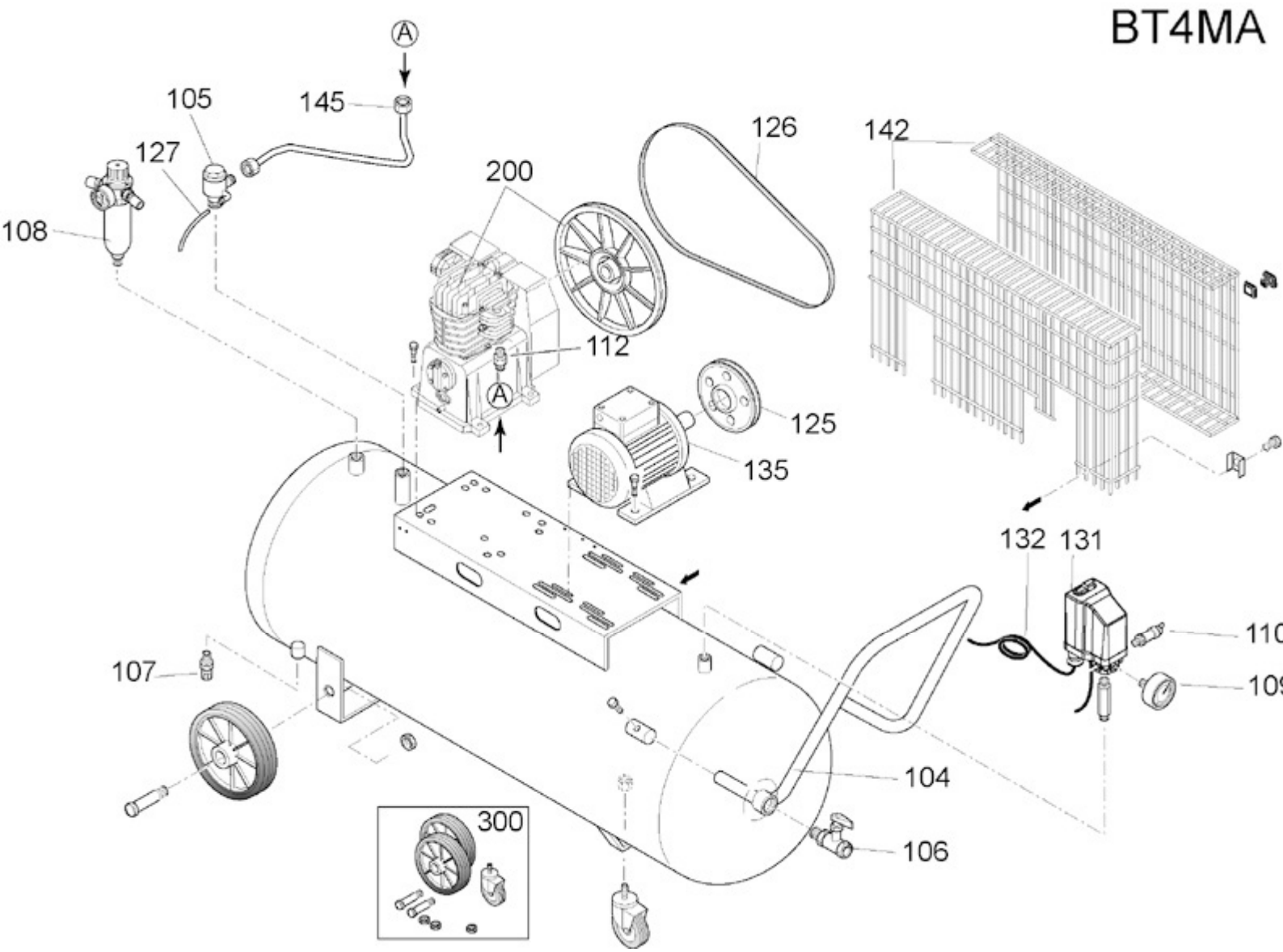

BPNC701FNM880

MK113-270-5,5

Pos	Component		MU	Multiplier
104	9083711	GRIP	PZ	1,0
105	9048007	CHECK VALVE	PZ	1,0
106	9047020	LINE COCK	PZ	1,0
107	9047097	CONDENSATE DRAIN COCK	PZ	1,0
108	9051091	PRESSURE REDUCER	PZ	1,0
109	9052805	PRESSURE GAUGE	PZ	1,0
110	9049304	RELIEF VALVE	PZ	1,0
112	4100629	NIPPLE/ELBOW	PZ	1,0
125	9076601	PULLEY	PZ	1,0
126	9075016	POLY V BELT	PZ	1,0
127	9270046	RILSAN PIPE 4/6 BLK IT PA12_LC	MT	1,5
131	9063148	PRESSURE SWITCH	PZ	1,0
132	9065874	POWER CABLE	PZ	1,0
134	9065417	COVER SEAL	PZ	1,0
135	847S01A	MOTOR	PZ	1,0
142	8343030	BELT GUARD	PZ	1,0
145	9043882	DELIVERY PIPE	PZ	1,0
200	41P0028SGL	BARE PUMP	PZ	1,0
300	41K0175	WHEELS/FEET MOUNTING KIT	PZ	1,0

MK113 SPA

BARE PUMP

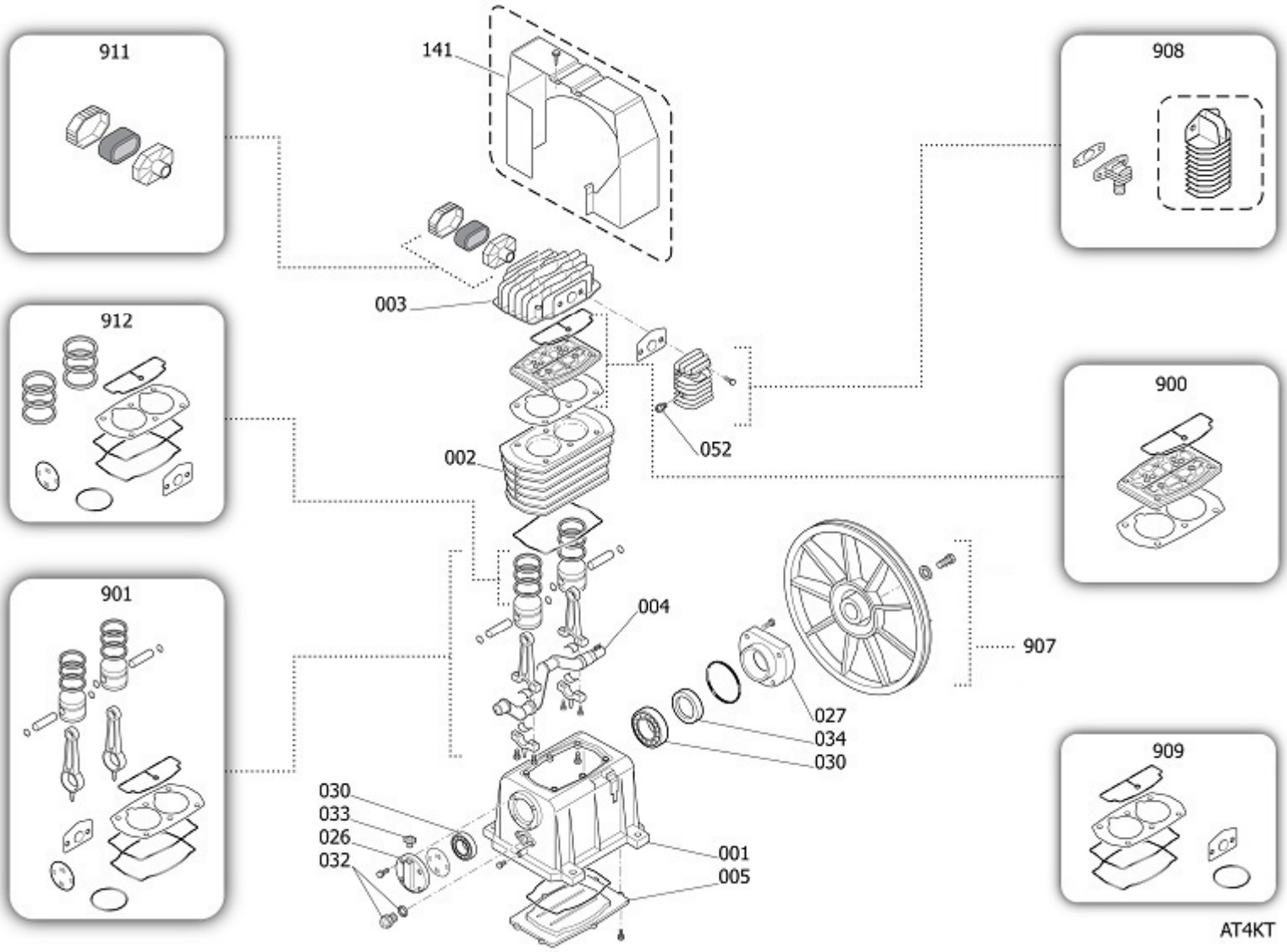

MK113 SPA

BARE PUMP

Pos	Component		MU	Multiplier
1	#113164007	CASING	PZ	1,0
2	4105310SGL	CYLINDER	PZ	1,0
3	4105480	HEAD	PZ	1,0
4	#113164012	SHAFT	PZ	1,0
5	#013164008	CASING COVER	PZ	1,0
26	#113141006	FRONT COVER	PZ	1,0
27	4105575	CASING REAR SUPPORT	PZ	1,0
30	#033015000	6206.P6.C0.V2.Z2.ROHS	PZ	1,0
30	9170116	6205.C0.P6.V2.Z2.ROHS	PZ	1,0
32	9434S01	OIL LIGHT	PZ	1,0
33	#012047000	OIL PLUG	PZ	1,0
34	#010008000	SEAL	PZ	1,0
52	4101047	EXHAUST VALVE	PZ	1,0
141	4105557	CANALISATION	PZ	1,0
900	9434A02	MPK VALVE PLATE MK113	PZ	1,0
901	9434B03	MPK PISTON-CONROD MK113	PZ	1,0
907	9434Y12	FLYWHEEL KIT	PZ	1,0
908	9434E03	MPK AFTERCOOLER MK113	PZ	1,0
909	9434F02	MPK GASKET MK113	PZ	1,0
911	4105290	AIR FILTER KIT	PZ	1,0
912	9434C03	MPK PISTON RINGS MK113	PZ	1,0